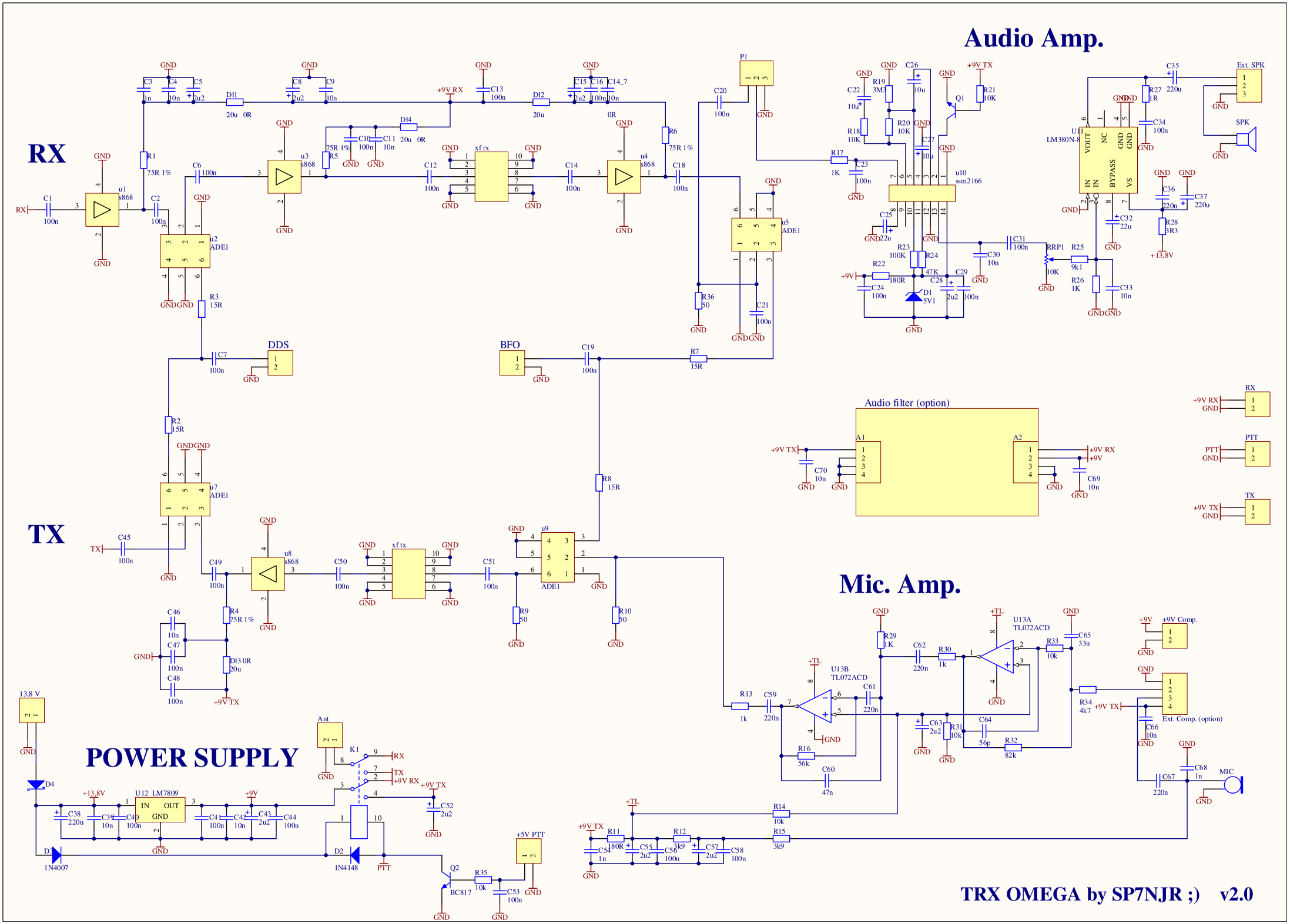
Audio Amp.
RX
TX
DDS
BFO
Audio filter (option)
Mic. Amp.
POWER SUPPLY
U12 LM7809
U11 LM380N-8
u10 ssm2166
U13A TL072ACD
U13B TL072ACD
Ext. SPK
SPK
Ext. Comp. (option)
MIC
TRX OMEGA by SP7NJR ;) v2.0