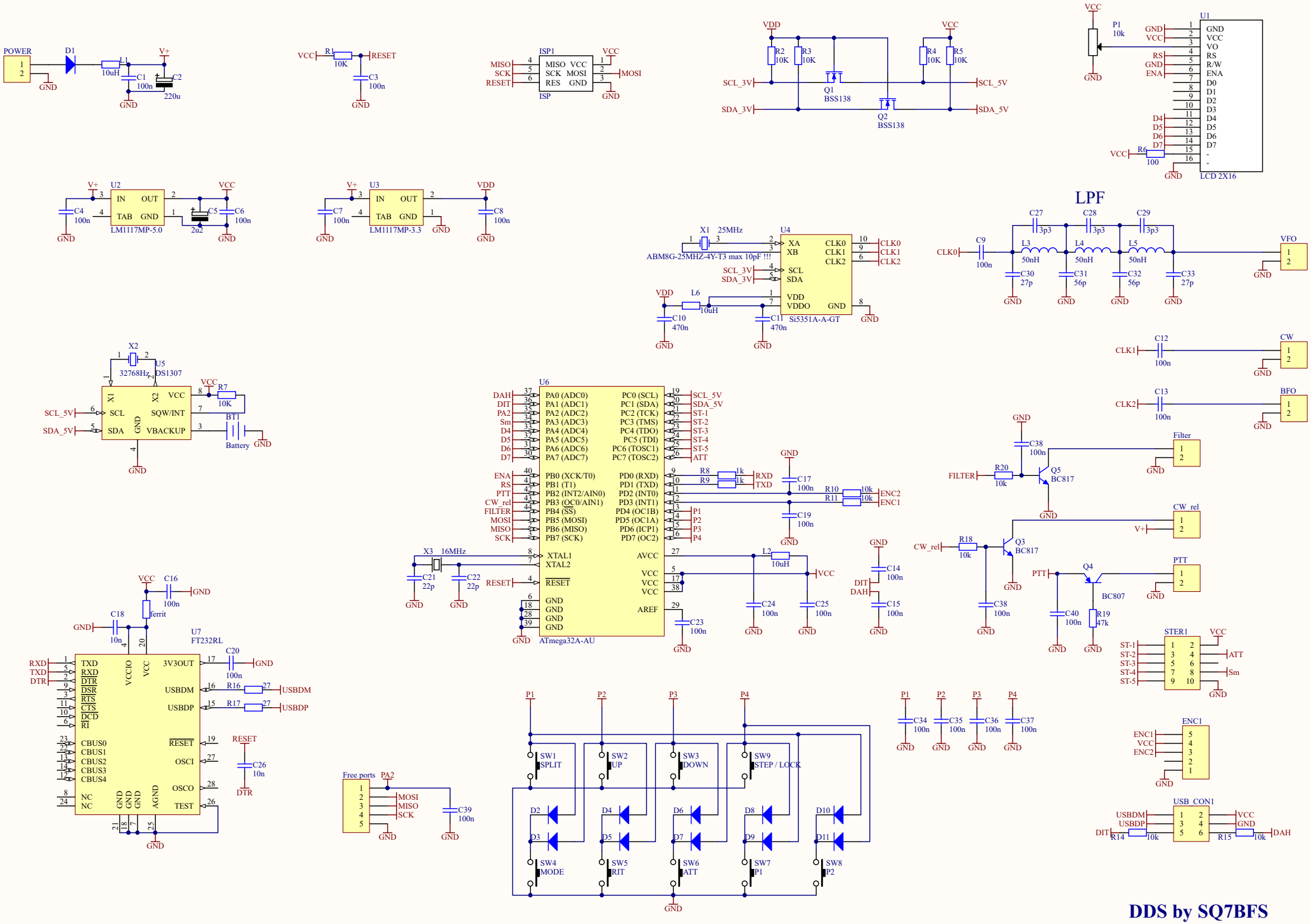

DDS by SQ7BFS